Visualize using your boat like your car with the unmatched speed, security, versatility and ease of use of the Sunstream FloatLift™. Powerful hydraulics pull the foam-filled polyethylene floats under the boat in as little as 30 seconds with the simple press of a remote control. In the raised position, the virtually unsinkable floats are automatically secured with patented GravityLock™. The floats also make it easy to access your hull and prop for cleaning and maintenance.

Complete Control

One-button on the included remote control to raise/lower your boat.

SwiftShield™ (accessory)

Semi-Automatic Remote controlled boat cover system

Simply tie the FloatLift™ to most places you can tie your boat: slips, side-ties or even a mooring buoy. The DC system can be charged using either the solar or AC powered options. The standard rear guides and remote control make docking incredibly easy.

The FloatLift™ is designed for fresh or salt water, with an aluminum frame, stainless steel hardware, marine grade hydraulic cylinders with stainless shafts, and marine grade hoses. The rubber-capped SuperBunks ™ are not only durable, but provide the ultimate in cushioned support for your hull.

- Level launch/lift in seconds
- Durable, foam-filled polyethylene pontoons
- Free-floating, portable design ties with dock lines
- Versatile docking locations: slips, side-tie, mooring buoys
- Stylish, low profile design allows accessibility to hull and prop
- Capacities up to 36K lbs, min water depth 12” under hull
- Remote-controlled operation
- Solar or AC power options

Premium Free-Floating Hydraulic Boat Lift

SUNSTREAM BOAT LIFTS

SUNSTREAMCORP.COM

SUNSTREAM

FLOATLIFT™

Premium Free-Floating Hydraulic Boat Lift

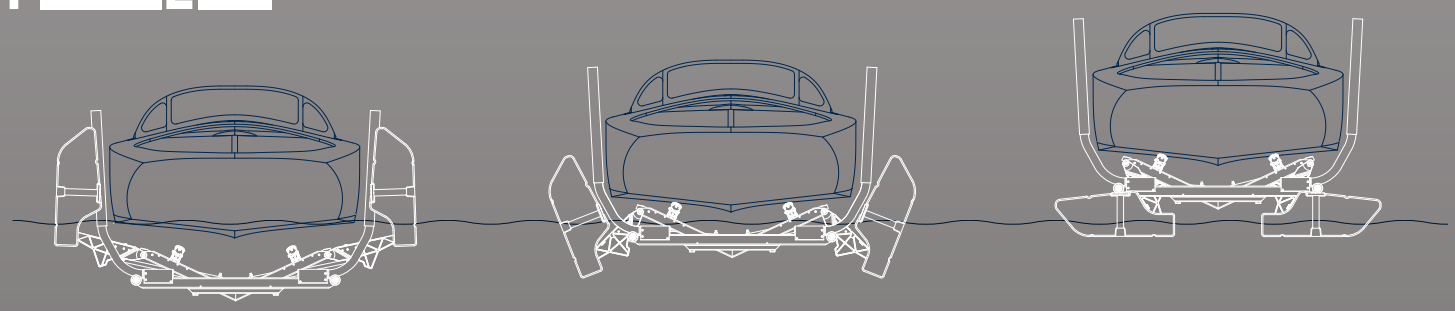

Specifications

FloatLift Models	FL6012	FL10014	FL13018	FL13018W	FL15023	FL15023W	FL24020	FL36026	FL40026
Capacity (lbs)	6,000	10,500	13,000	13,000	15,000	15,000	24,000	36,000	40,000
Lift Length	20'	24'	29'	29'	34'	34'	38'	44'	44'
Lift Width UP Position	10'6"	11'11"	11'11"	13'4"	11'11"	13'4"	16'	16'	16'
Weight (lbs)	1,300	2,500	2,900	3,100	3,812	3,900	8,000	9,000	9,000
Launching Speed (approx)	18 sec	18 sec	40 sec	40 sec	35 sec	35 sec	60 sec	90 sec	90 sec
Water Depth Required	draft + 12"	draft + 12"	draft + 12"	draft + 12"	draft + 12"	draft + 16"	draft + 20"	draft + 20"	draft + 20"
Minimum Slip Width	12'	14'*	14'*	16'**	14'*	16'**	22'	22'	22'
Maximum Boat Beam	8'6"	10'6"	10'6"	12'	10'6"	12'	13'9"	14'	14'
Allowable Draft for typical V-Hull***	20-22"	34"	34"	34"	34"	34"	40"	40"	40"

* Wider slip required for beams over 9'6" **Wider slip required for beams over 11'6"
***For Cat Hull allowable draft subtract 12" for many boats

PATENTS: 6830410, D487423, D484086, D484450, 6823809, 7527014, 6032601

Accessories

- SwiftShield™ - Semi-Automatic Boat Cover System NEW
- HoverCover™ for protection from sun, rain and debris
- Motorstop for positioning fore and aft
- HandsFree™ Controller (patented and patents pending) NEW
- PowerPack shelves for mounting PowerPack to guide-on or dock
- Universal LED Underwater Lights
- Tournament Boat Bunk Bracket
- Pontoon Kits with and without Ballast System

HoverCover™ Models	FA-H24108	FA-H30144*
Length	24'	30'
Width Between Uprights	108"	Min 114" Max 126"
Cover Material – navy (std)	Sunbrella Canvas	Sunbrella Canvas
Lift Model	FL6012	FL10014*, FL13018*
Max Boat Height without HC Extensions **		103"

* Not for use with mooring buoy application
**Boat height = hull draft + bridge clearance

Remote control standard with all FloatLift™ models.

SUNSTREAM BOAT LIFTS

253.395.0500 | SUNSTREAMCORP.COM